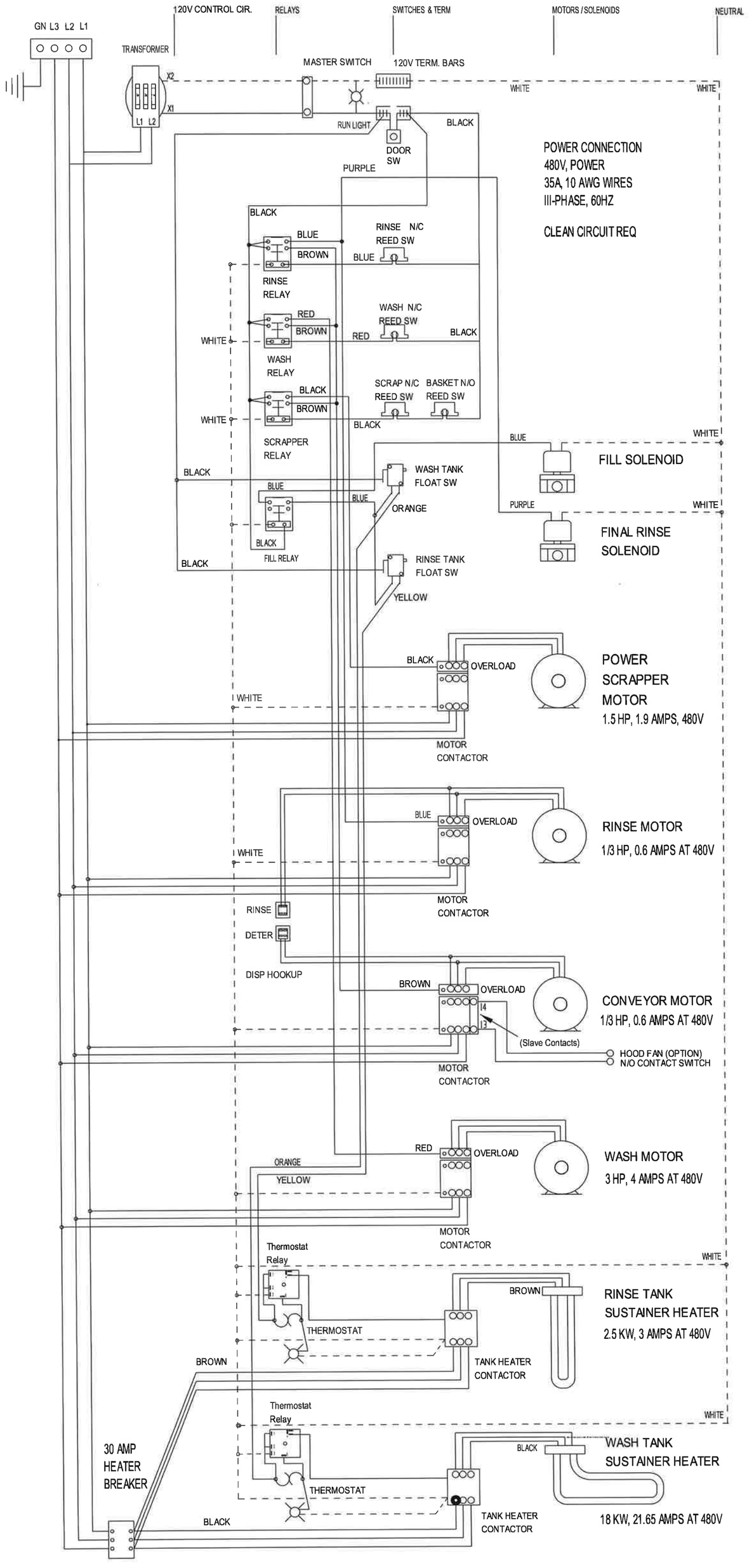ADC-66 Conveyor 480v, 35a, III-ph, 60Hz 12/4/2024