RIGHT FEED

W/O VENT OPTION

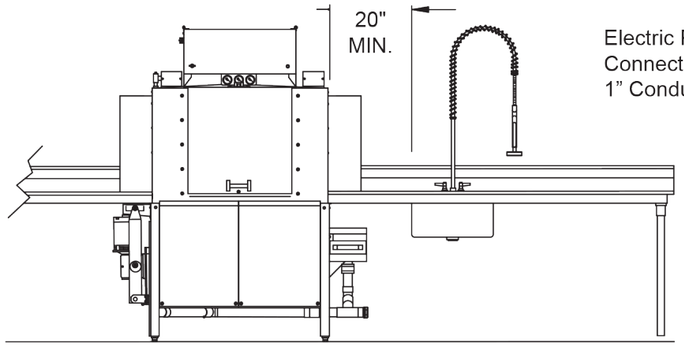

TOP VIEW OF LEFT FEED

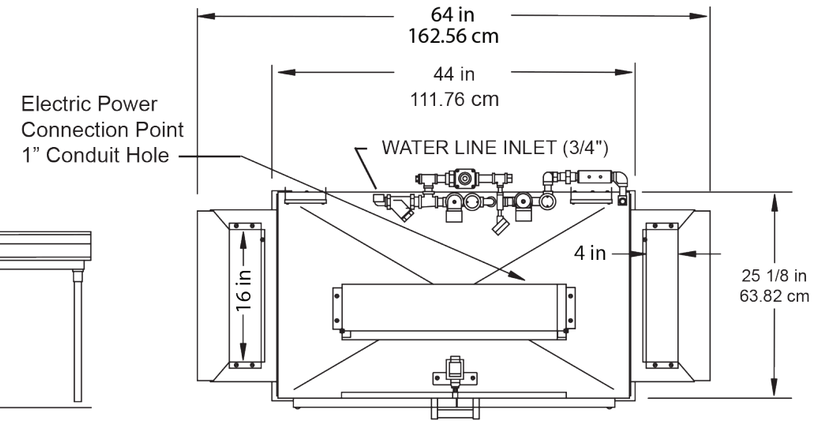

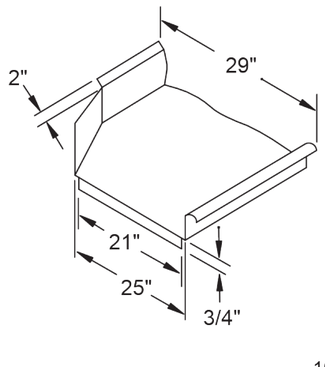

IMPORTANT NOTES

Both clean and soiled tables are to be bolted to the dishmachine with the 1/4-20 x 1/2" bolts and nuts provided.

Leaks cause potential problems in electrical and mechanical areas under the machine.

Quick drains (table scuppers) are not compatible with stage type conveyor dishmachines.

Scrap sinks shall be no closer than 20" minimum from the dishmachine end of the table.

The clean exit table should be at least 72" straight for efficient conveyor operation.

Electrical and plumbing connections must be made by a qualified service person who will comply with all appropriate state and local health, electrical, plumbing, and safety codes.

The Manufacturer reserves the right to modify these specifications in compliance with regulatory agencies and manufacturing expediency.

NOTE:

All dimensions listed have a tolerance of + or - 1/8" unless otherwise noted.

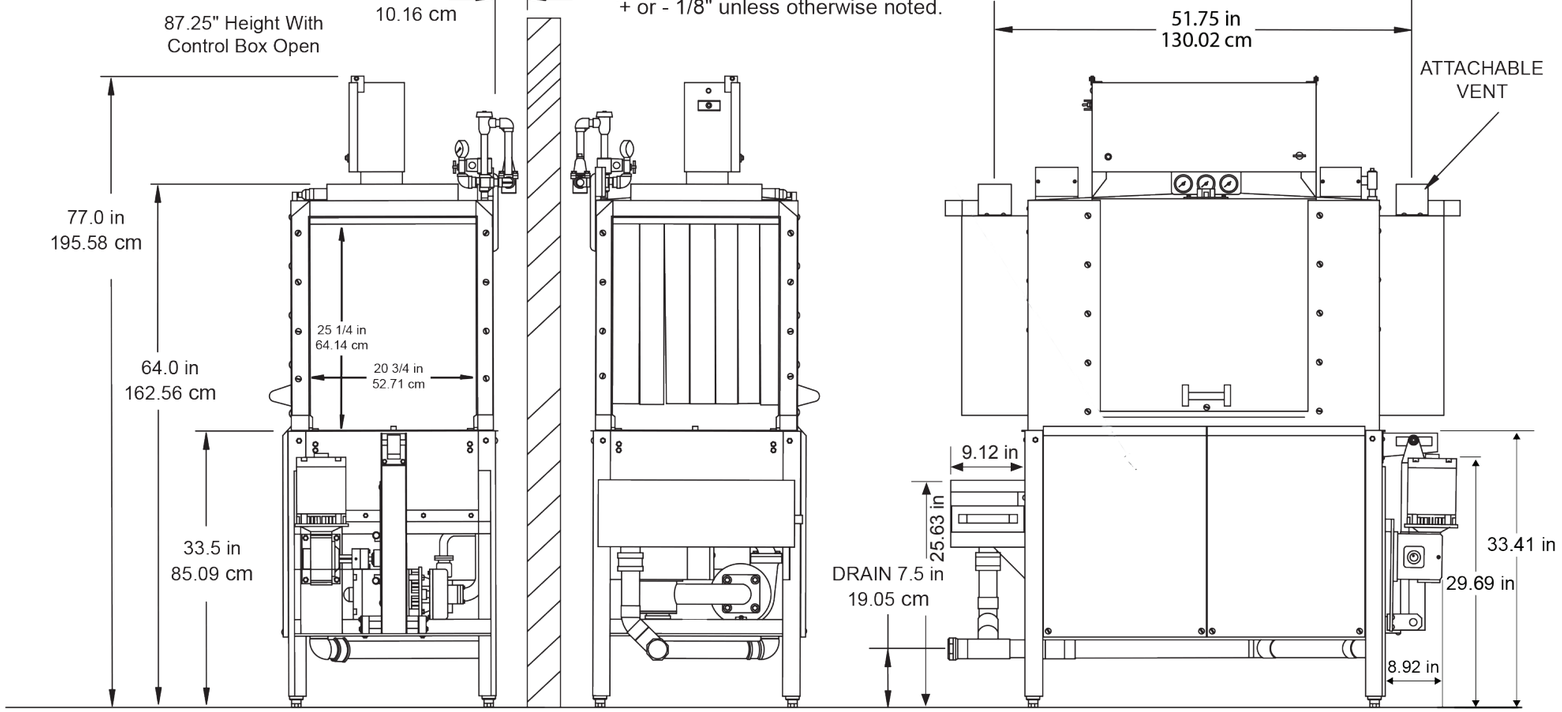

Effective: 11/2026

CLEANSIDE VIEW **SOILSIDE VIEW** **FRONT VIEW**

American Dish Service™

Manufacturers of Ware Washing Equipment

c UL US LISTED NSF

ADC-44 TALL 480V Specifications

U.S. REGISTERED PATENTS

ADC-44 TALL	**Family Models** (left or right feed)	
	Hot Temp	**Chemical**
NSF Rated Capacity	244 rack/hr	244 rack/hr
Conveyor Speed (ft/min)	6.7 (2.04 M)	6.7 (2.04 M)
Water Consumption (Gal/Rack)	0.41 (1.55 L)	0.41 (1.55 L)
Total Gal/Hour	100.2 gph (379 L)	100.2 gph (379 L)
Final Rinse Temperature (20 psi)	180º F (82.2º C)	120º F (48.8º C)
Sanitizer (Water / Chlorine)	180º F	50ppm

Electrical Power Supply **480V, 3PH, 24A, 60Hz**

3 Phase installation requires minimum 10 AWG copper wires (90° C), a suitable ground and a clean circuit.

Motor Ratings . . . . . 3 HP Wash, 1/3 HP Rinse, 1/3 HP Conveyor

Heater Ratings . . . . . 12 KW Wash, 2.25 KW Rinse

Rack Size . . . . . Standard 19.75" x 19.75" (50.2 x 50.2 cm)

Access Door Clearance . . . . . 21" x 24.5" (53.34 x 62.2 cm)

Rack Clearance (through machine) . . . 25.25" x 20.75" (64.14 x 52.7 cm)

Water Inlet . . . . . (0.75") F.P.T.

Drain Size . . . . . (2.0") F.P.T.

Height (with door open) . . . . . 85.75" (217.81 cm)
(87.25" / 221.62 cm with control box cover open)

Width (overall) . . . . . 64" (162.5 cm)

Width, Table to Table . . . . . 44" (167.6 cm)

Depth . . . . . 30" (76.2 cm)

Shipping Weight . . . . . 780 lb (353.8 kg)

Shipping Dimensions (crated) . . . . . 72" L x 36" W x 85" H
(182.9 cm x 91.4 cm x 215.9 cm)

COPYRIGHT 11/2026

WELBILT
an ALI Group Company